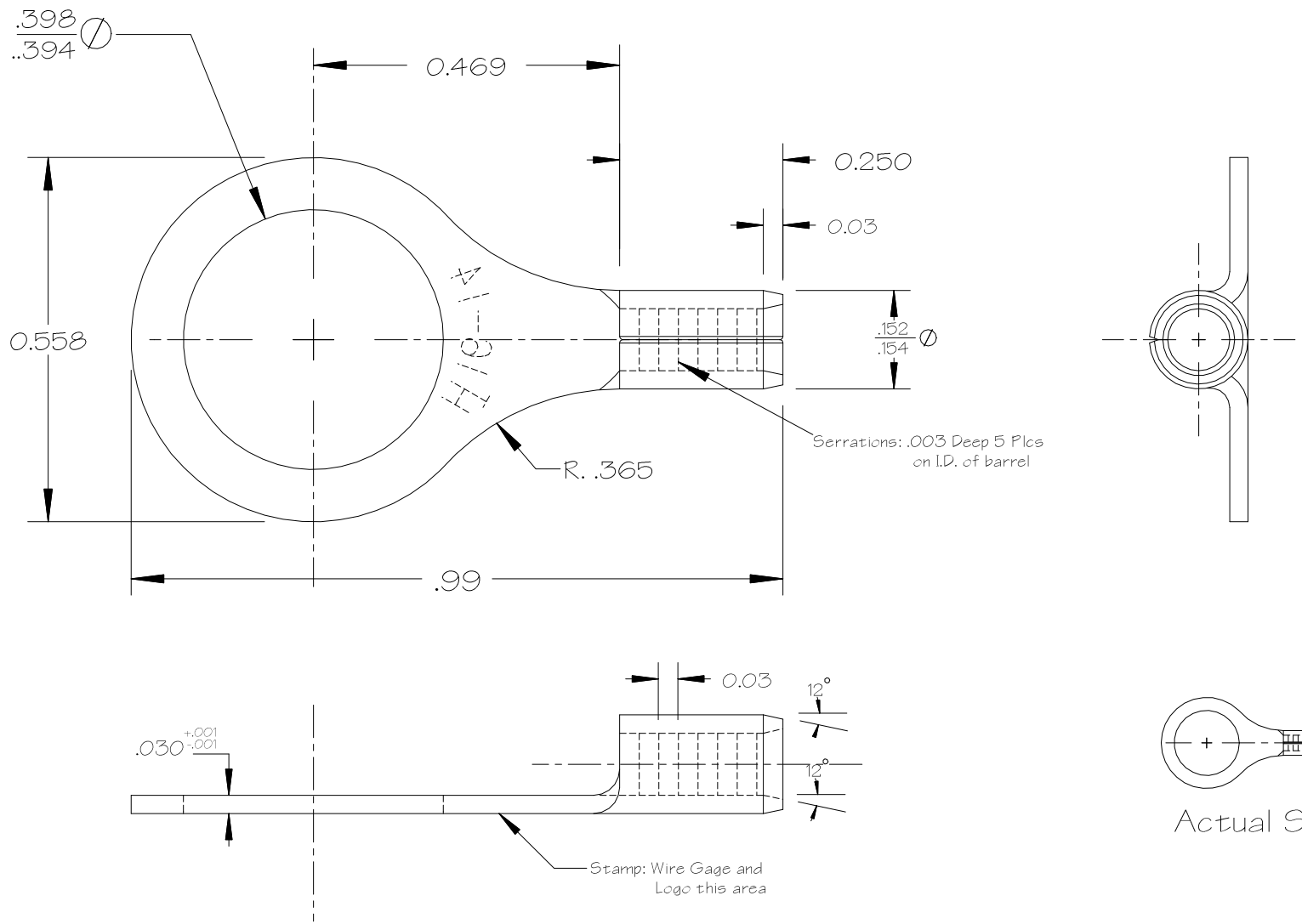

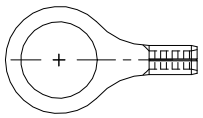

Actual Size

Notes:

1. Material: ETP Alloy 110 Copper 1/2 Hard Temper
   ASTM Spec B152
2. Heat Treat: Anneal to Soft Temper
3. Finish: Flash Electro Tin Plate
   ASTM Spec B545
   Mil Spec: Mil-T-10727C Type I
   .0001-.00025 Thick

NOTES

1. DO NOT SCALE PRINT.
2. BREAK ALL NON-CUTTING EDGES.
3. STAMP OR ETCH HTT,
   DET NO., MAT'L, & HEAT TREAT
4. GRIND AS SHOWN.

TOLERANCES UNLESS OTHERWISE SPECIFIED .XXX +/- .010 .XX +/- .020 .X +/- .030 FRACTIONS +/- 1/32 ANGLES +/- 0°30'	Hillsdale Terminal	250 Industrial Drive 2222 W. Moore Rd. Hillsdale, Michigan 49242	
	Title: Uninsulated 16-14 GA. 3/8" Stud Ring		
	DRAWN BY: J. Condon	DATE: 02/14/99	
DIE NUMBER: D-10	CHECKED BY	SCALE: 4X	
SHEET SIZE: A	MATERIAL: See Notes	CAD DRAWING #: 10103	