14-227

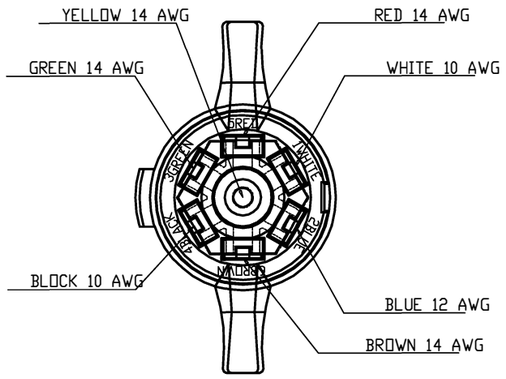

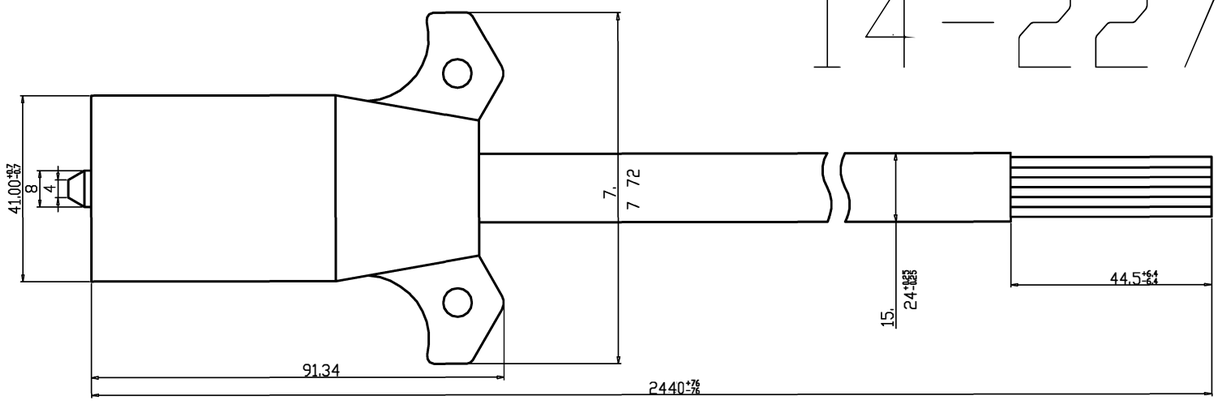

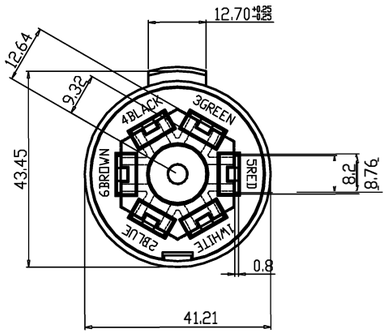

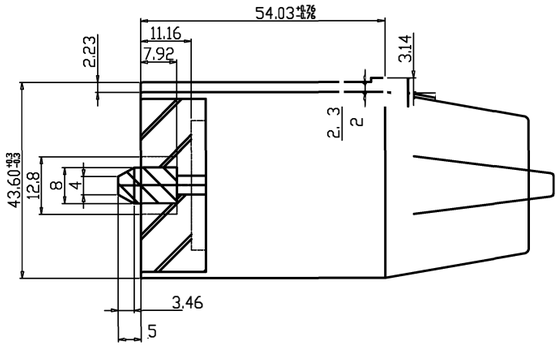

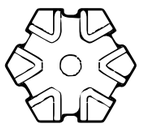

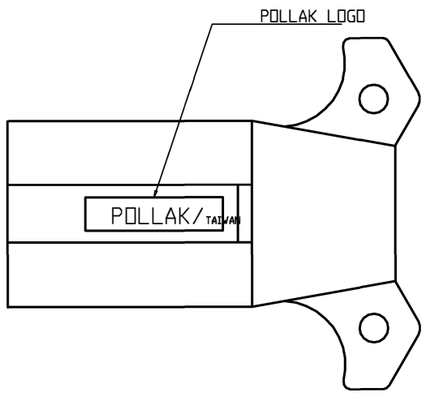

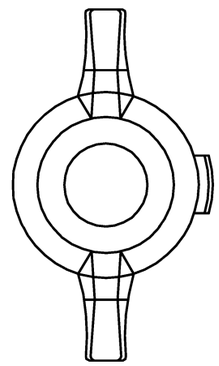

NOTES:
1. Dimensions are in mm. with Inches in parenthesis. mm(in.)
2. Cut Length of Cable is 2413 ± 38.1 mm (95 ± 1.5 inches)
3. Cable Material is PVC. Color is Black
4. Plug to Have 'pollak' Logo Where Indicated
5. Kit Includes Instruction Sheet IS-51
6. Standard Pack Quantity Is Fifteen (15) Assemblies
7. Connector Material is ABS. Color is Black. Grommet Material is PVC. Color is White
8. 10 Gage Wires are 65 Conductors of 28 AWG (.32 mm Dia.). Insulation Material is PVC
9. 12 Gage Wires are 41 Conductors of 28 AWG (.32 mm Dia.). Insulation Material is PVC
10. 14 Gage Wires are 26 Conductors of 28 AWG (.32 mm Dia.). Insulation Material is PVC
11. Terminal Material is Brass

14-117
Pollak® Plastic Trailer End
12-706 with 8 ft. of Cable.
16
Trailer Tow Accessories
TRAILER WIRING TIPS
Avoid splices wherever possible * Establish a solid electrical ground * Maintain clean and weatherproof wire connections * Make sure that the various wires and harnesses are free of stress and are not dragging or likely to be snagged *
12-744 Connector Adaptor (7-Pole to 5-Pole; not shown)
12-743 Connector Flex Adaptor (7-Pole to 4-Pole; not shown)
14-116: same as 14-117
but with 3 ft. of Cable

14-227: Overmolded
Trailer End – RV Plug with
8' Harness

	M
A0X	
A1X	
A2X	
A3X	
A4X	
A2 No.	

1/1

14-227

7-WAY RV CALBE & PLUG