Power Relays Type 2: 12 V
0 332 002 159

Change over	Normal close	Normal open
		✓

Mounting bracket	Resistor	Diode	Life durability	Current	Voltage	Number of contacts	Housing type	Temperature range	Degree of protection with coil connected
✓	✓	X	100.000 at 100 A	100 A	12 V	4	Plastic housing	-40 °C… +85 °C	IP54

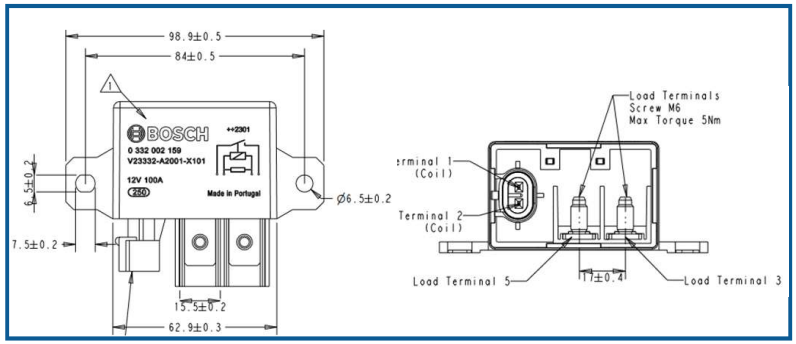

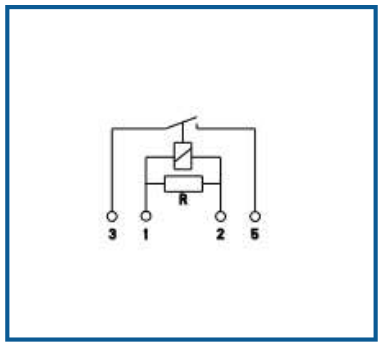

Back to general overview

© Robert Bosch GmbH 2024. All rights reserved, also regarding any disposal, exploitation, reproduction, editing, distribution, as well as in the event of applications for industrial property rights.