RENNSTEIG TOOLS, INC.

PRODUCT NAME

Rennsteig Locator for APEX 2.8 Male terminals

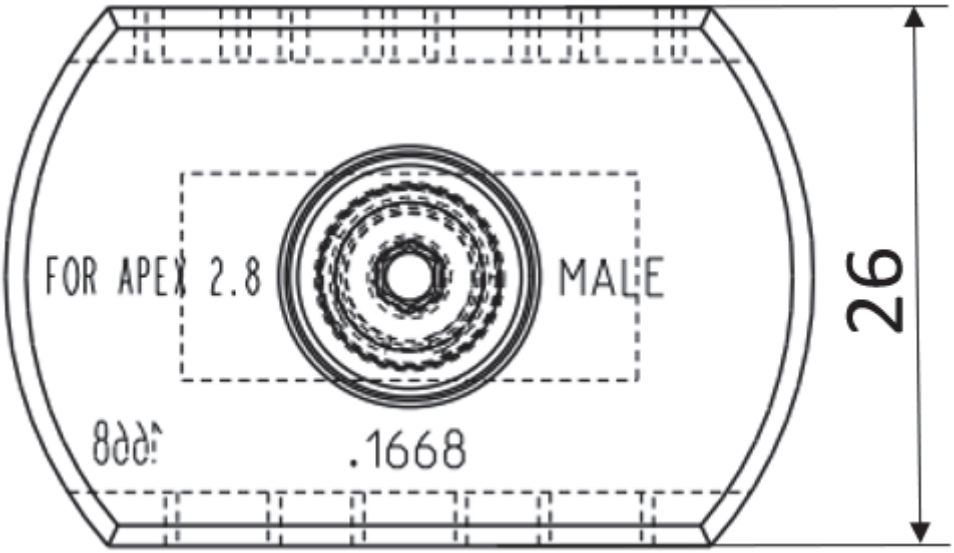

Measurements in Millimeter.

SPECIFICATION

P/N	Description	Application	Terminal P/N	Capacity	Applicable for
624 1668 0 01 RT	Locator	APEX 2.8 MALE	54002201 / 1076276 54001001 / 10762774 54002230 / 33501642 54002229 / 15520890	AWG 22 / 10-12	Rennsteig Crimp System Tools

Rennsteig Tools, Inc. • 411 Hackensack Avenue, Suite 200 • Hackensack, NJ 07601-6331 • Phone: 330-315-3044 • Email: info@rennsteig.us • Web: www.rennsteig.us

REV20190528

RENNSTEIG TOOLS, INC.

CRIMP SPECIFICATION

Core Crimp

Terminal	Wire Size	Crimp height CCH (mm)	Crimp width CCW (mm)	Pull out force (N) DIN EN 60352-2
54002201 / 10762776	AWG 22	1.40 ± 0.05	2.05 ± 0.1	40 *(nominal)*
54001001 / 10762774	AWG 10	2.45 ± 0.05	3.85 ± 0.1	355 *(nominal)*
54001001 / 10762774	AWG 12	2.20 ± 0.05	3.85 ± 0.1	275 *(nominal)*

Insulation Crimp

Terminal	Wire Size	Insulation height ICH (mm)	Insulation width ICW (mm)	
54002201 / 10762776	AWG 22	1.96 ± 0.05	2.60 ± 0.1	
54001001 / 10762774	AWG 10	3.70 ± 0.05	4.15 ± 0.1	
54001001 / 10762774	AWG 12	3.45 ± 0.05	4.15 ± 0.1	

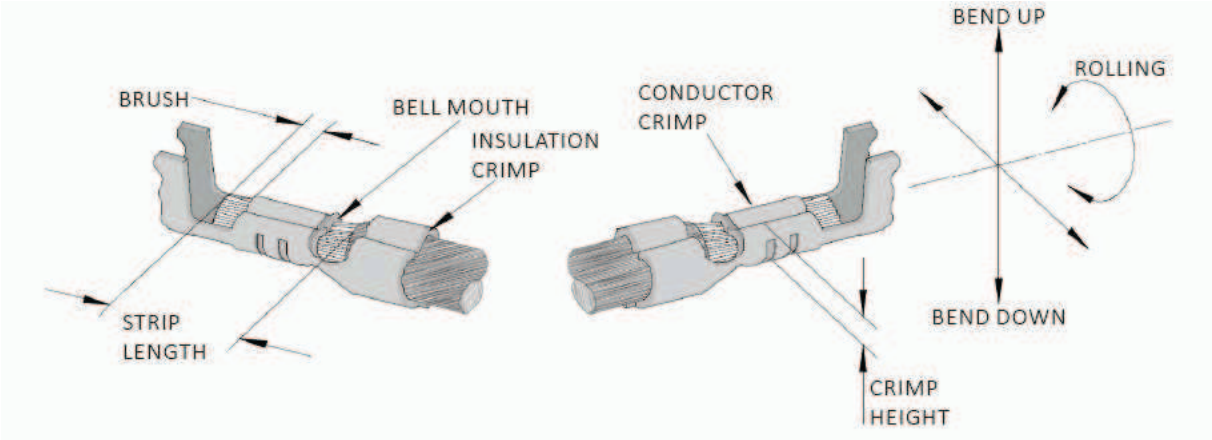

The above terminal drawing is a generic terminal representation. It is not an image of a terminal listed in the scope.

Rennsteig Tools, Inc. • 411 Hackensack Avenue, Suite 200 • Hackensack, NJ 07601-6331 • Phone: 330-315-3044 • Email: info@rennsteig.us • Web: www.rennsteig.us

REV20190528