TABLE 1

YAZAKI SUB ASSEMBLY PART NO.	NO.	YAZAKI PART NO.	MATERIAL	COLOR	QTY.
⚠ 7282-7028-30 ETC.	①	⚠ SEE TABLE 2	PBT	⚠ SEE TABLE 2	1
	②	7157-4349	PBT	NATURAL	1

⚠TABLE 2

YAZAKI SUB ASSEMBLY PART NO.	YAZAKI PART NO.	COLOR
⚠ 7282-7028	7182-7028	NATURAL
⚠ 7282-7028-10	7182-7028-10	DARK GRAY
7282-7028-30	7182-7028-30	BLACK
⚠ 7282-7028-40	7182-7028-40	LIGHT GRAY
⚠ 7282-7028-50	7182-7028-50	ORANGE
⚠ 7282-7028-60	7182-7028-60	GREEN
⚠ 7282-7028-80	7182-7028-80	BROWN
⚠ 7282-7028-90	7182-7028-90	BLUE

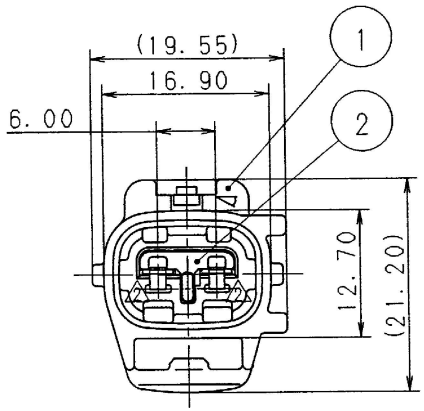

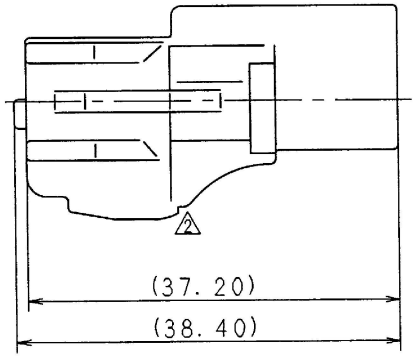

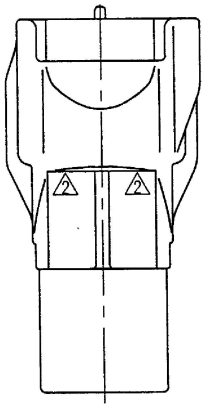

注記

1. 嵌合相手品番：7283-7028-30
2. 適用端子品番：7114-4025 ETC.
3. 適用ゴム栓品番：7157-3648 ETC.

NOTES

1. MATING PART NO. :7283-7028-30
2. APPLICABLE TERMINAL NO. :7114-4025 ETC.
3. APPLICABLE RUBBER STOPPER NO. :7157-3648 ETC.

ISSUE MARK

LET	DATE	REVISION RECORD	NO.	CHKD
②	97.03.31	CHANGED FORM	C97-L551	H.K
⚠	96.12.21	ADDED PART NO. & CHANGED FORM	C96-N240	M.T
	89.09.13	NEW	C89-L967	M.T

GENERAL TOLERANCE

	10MAX	50MAX	100MAX	250MAX	2500VR	ANGLE	ECCENT
A	±0.15	±0.2	±0.3	±0.5	±0.75	±30′	0.1
B	±0.2	±0.3	±0.55	±0.95	±1.4	±30′	0.1
C	±0.3	±0.5	±0.8	±1.4	±2	±30′	0.15

SPECIFIED — MASS g

CUSTOMER
CUSTOMER PART NO. — CUSTOMER DWG NO.
OFFICE — TRIAL PART NO.
VENDOR
VENDOR NO.

DWG TYPE	DWG SOURCE	DWG DATE	UNIT	SCL	ANGLE
R	NEW	89.09.18	mm	⚠2/1	3

APPROVED	CHECKED	CHECKED	DESIGN	DRAWN
97.04.04		97.04.03	SAMEJIMA 89.06.21	AOYAMA 97.03.31

MATL. SPEC. SEE TABLE 1 — TREAT. & FIN.

NAME 090Ⅱ 2P SEALED CONNECTOR HOUSING MALE SUB ASSEMBLY

PART NO. CH. CODE ⚠7282-7028-30 ETC.

DWG NO. 7282-7028-30:R — SET DWG NO.

YAZAKI CORPORATION