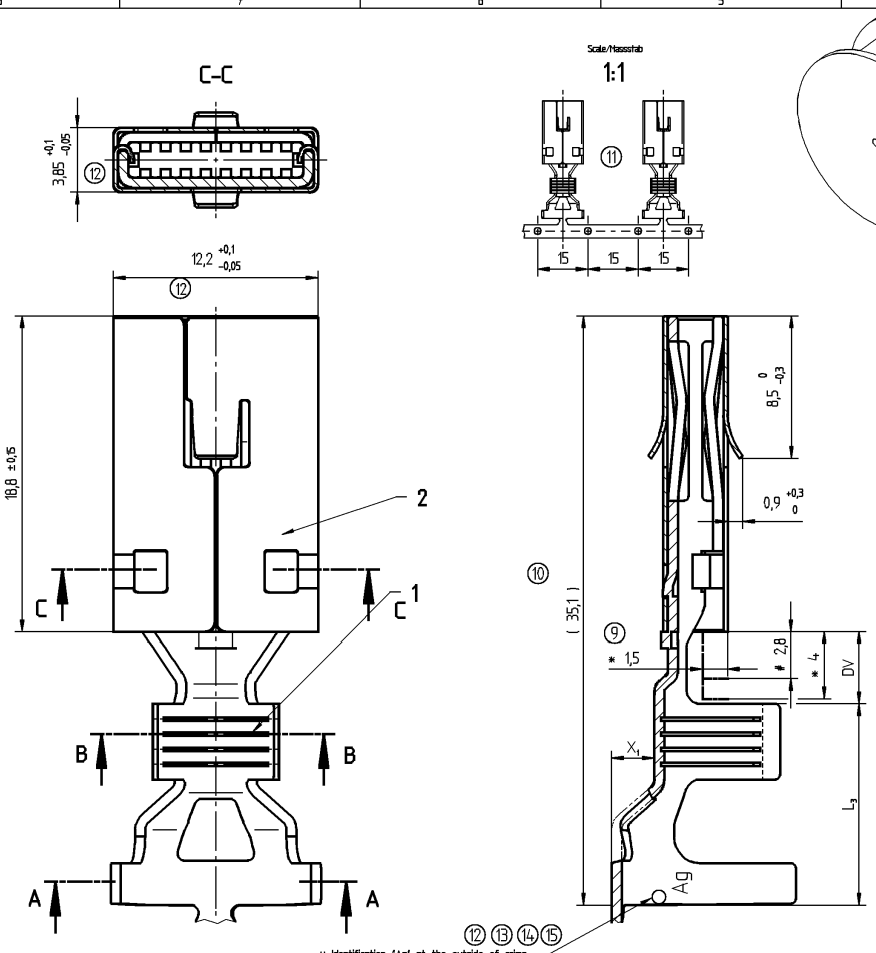


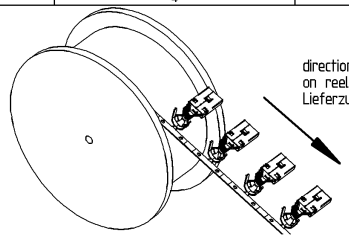


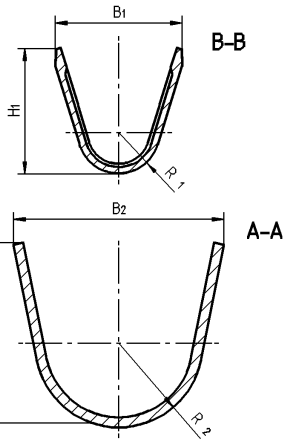


⑧ Remarks:
- permissible gauge Part-No.: 10757848
- permissible removal tool
  ID-No.: 954 222 / Part-No.: 10714800
- #= minimal space for secondary lock
- *= maximum space for secondary lock
- use according to crimpparameters of validation by Packard Process Engeneering
- engageforce reduced for 13641162/ -1164/ -7765/ -7787 and 33130796
- key product caracteristic (KPC) is not required

⑫⑮ Bemerkungen:
- zulaessiger Pruefstift Part-No.: 10757848
- zulaessiges Entriegelungswerkzeug
  ID-Nr.: 954 222 / Part-No.: 10714800
- #= minimaler Freiraum fuer Zweitverriegelung
- *= maximaler Freiraum fuer Zweitverriegelung
- Fuer die Verarbeitung gelten die Crimpparameter aus der Crimpvalidation von Delphi Packard Process Engeneering
- Steckkraefte reduziert fuer 13641162/ -1164/ -7765/ -7787 und 33130796
- keine besondere Pruduktkarakteristik (KPC) erforderlich

⑫⑬⑭⑮
ⓤ Identification 'Ag' at the outside of crimp for Part-No.: 15408423/ 15458198/ 15482568/ 13641162/ 13647765/ 33130796
ⓤ Identification 'Ag○' at the outside of crimp for Part-No.: 13641164/ 13647787

⑭
ⓤ Kennzeichnung 'Ag' aussen auf dem ISO-crimp fuer Part-No.: 15408423/ 15458198/ 15482568/ 13641162/ 13647765/ 33130796
ⓤ Kennzeichnung 'Ag○' aussen auf dem ISO-crimp fuer Part-No.: 13641164/ 13647787

| Zone | DWG Status REV | N/P | CHG | Revision history | Date | Name | Check | St. CHK |
|---|---|---|---|---|---|---|---|---|
| A7 | 04 | | | Dim $H_1$ was 11,35<br>Mass $H_1$ war 11,35 | 06MY97 | Pakel | Red. | R.Wis. |
| A3 | 05 | | | ID 406569 for cross-section 10 mm² added<br>ID 406569 fuer Querschnitt 10 mm² hinzu | 05NO97 | Pakel | Red. | R.Wis. |
| A5/A6 | 06 | | | Material specification added<br>Werkstoffangabe ergeanzt | 20JA98 | Pakel | Red. | R.Wis. |
| | 07 | | | Drawing with UG new draw up<br>Zeichnung auf UG neu erstellt | 16JN99 | U/Lap. | Red. | R.Wis. |
| B4 | 08 | | | Notes added<br>Bemerkungen hinzu | 11AU99 | Wehde | Red. | R.Wis. |
| C5 | 09 | | | Dim. *1,5/*4,0/#2,8/DV mm added<br>Mass *1,5/*4,0/#2,8/DV mm hinzu | 11AU99 | Wehde | Red. | R.Wis. |
| C6 | 10 | | | Tolerance ±0,3 (dim. 35,1) deleted<br>Toleranz ±0,3 (Mass 35,1) geloescht | 11AU99 | Wehde | Red. | R.Wis. |
| F5/F6 | 11 | | | Views added<br>Ansichten hinzu | 11AU99 | Wehde | Red. | R.Wis. |
| A3 | 12 | | -- | Part-No.: 15408423 added<br>Part-No.: 15408423 hinzu | | | | |
| B6 | | | -- | Identification 'Ag' added<br>Kennzeichnung 'Ag' hinzu | | | | |
| E7 | | AA | | Dim. 12,2+0,1/-0,05 was 12,3-0,15<br>Mass 12,2+0,1/-0,05 war 12,3-0,15 | | | | |
| F7 | | AB | | Dim. 3,85+0,1/-0,05 was 3,95-0,15<br>Mass 3,85+0,1/-0,05 war 3,95-0,15 | 14MY01 | Pakel | Red. | R.Wis. |
| E/F7 | 12 | AC | | Tolerance: -0,05 was +0,05<br>Masstoleranz: -0,05 war +0,05 | 08AU01 | Pakel | Red. | R.Wis. |
| A/B4 | 12 | AD | | KPC Text added<br>KPC Text hinzu | 18DE01 | Thof. | Red. | R.Wis. |
| A3/B6 | 13 | | -- | Added Part No.: 15458196 / 15458198<br>Part No.: 15458196 / 15458198 hinzu | 02JN03 | P.Gwoz | Red. | R.Wis. |
| A3/B6 | 14 | | -- | Added Part No.: 15482568<br>Part No.: 15482568 hinzu | 07JN04 | Mgrudz | Red. | R.Wis. |
| A7 | 14 | AA | | Dim. 9,50 was 9,10<br>Mass 9,50 war 9,10 | | | | |
| A7 | | AB | | Dim. 9,30 was 9,00<br>Mass 9,30 war 9,00 | 26JL04 | M.Kie | Red. | R.Wis. |
| A3/A8 | 15 | | -- | Part-No.: 13641162; -1164; -7765; -7787 added<br>Part-No.: 13641162; -1164; -7765; -7787 hinzu | | | | |
| B6 | | | -- | Identification 'Ag*' for 13641164; -7787 added<br>Kennzeichnung 'Ag*' fuer 13641164; -7787 hinzu | | | | |
| B4 | | AA | | Notes 'engageforce reduces' added<br>Bemerkungen 'Steckkraefte reduziert' hinzu | 15MY07 | M.Phi | Red. | M.Skr. |
| B5 | 15 | AB | | Symbol 'o' was '*'<br>Zeichen 'o' war '*' | 03JL07 | M.Phi | Red. | M.Skr. |
| B3/5 | 16 | | | Part No. 33130796 added / hinzu<br>Coloumn added / Spalte hinzu | 18NO13 | Phil | R.Gut | SYS |
| A/B5 | 16 | AB | | PN 13641164/10730408 cross section<br>8-10mm² was 10mm² | 14SE18 | Phil | R.Gut | SYS |

Scale/Massstab 1:1

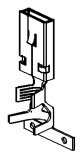

Scale/Massstab 2:1

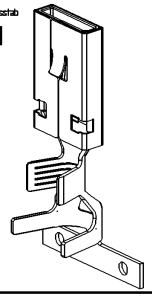

Copying of this document, and giving it to others and the use or communication of the contents thereof, are forbidden without express authority. Offenders are liable to the payment of damages. All rights are reserved in the event of the grant of a patent or the registration of a utility model or design. Weitergabe sowie Vervielfältigung dieser Unterlage, Verwertung und Mitteilung ihres Inhaltes ist nicht gestattet, soweit nicht ausdrücklich zugestanden. Zuwiderhandlungen verpflichten zu Schadenersatz. Alle Rechte für den Fall der Patenterteilung oder Gebrauchsmuster-Eintragung vorbehalten.

| | Date/Datum | Name |
|---|---|---|
| Drawn by Bearbeiter | 16JN99 | U/Lap. |
| Checked by Geprueft | 06JL99 | Pakel |
| Standard chk. Norm gesr. | 17NO99 | R.Wis. |

DELPHI
D – 42119 WUPPERTAL

Plating / Oberflaeche see chart siehe Tabelle

Material Werkstoff: see chart / siehe Tabelle

Unfoleranced dim Freimasse
< 1 mm = ±0,08
1-12 mm = ±0,15
>12 mm = ±0,25
Angle/Winkel ±4°

Title/Benennung
**Receptacle Ducon 9,5x1,2**
Assembly, sealed
**Flachsteckhuelse Ducon 9,5x1,2**
Zusammebau, gedichtet

Projection/Projektion

| Drawing-No.: | Page - from | Status | Scale/Massstab |
|---|---|---|---|
| 15344676 | 01 - 01 | KZus | 5:1<br>1:1 ; 2:1 |

Replacement for/Ersatz fuer: 6810.064/K mit Index 0
Drawing- /Ref. No.: ; Zeichnungs- /Teil Nr.: 6810.064/KZus /ID see chart/siehe Tab.
Format: A2

ARCHIVES : 10.1.07

| L3 | L2 | DV±0,3 | X1 | R2±0,1 | R1±0,2 | H2±0,2 | H1±0,2 | B2±0,4 | B1±0,2 | Material Dicke Thickness | Oberfläche Surface | Werkstoff Material | Ltg.-Typ Cable-Type | Querschn. Cross-section | Kontakt-variante Contact version | Normkammer Cavity | Ausführung Version | Teil Part | ID-Nr.: / Part-No.: | Part-REV | Datum-Date |
|---|---|---|---|---|---|---|---|---|---|---|---|---|---|---|---|---|---|---|---|---|---|
| 11,30 | . | 5,0 | 2,15 | 5,0 | 2,60 | 11,0 | 7,50 | 12,55 | 7,40 | 0,60±0,025 | f.SnAg | CuNiSi | . | 10,0 | 3 | . | ⓤ sealed | 1 | 33130796 | 01 | 18NO13 |
| 11,30 | . | 5,0 | 2,15 | 5,0 | 2,60 | 11,0 | 7,50 | 12,55 | 7,40 | 0,60±0,025 | f.SnAg | CuNiSi | . | 10,0 | 2 | . | ⓤ sealed | 1 | 13647765 | 01 | 15MY07 |
| 12,05 | . | 4,25 | 2,15 | 5,0 | 3,00 | 11,0 | 9,50 | 12,55 | 9,30 | 0,60±0,025 | g.Ag | CuNiSi | . | 16,0 | 2 | . | ⓤ sealed | 1 | 13647787 | 01 | 15MY07 |
| 11,30 | . | 5,0 | 2,15 | 5,0 | 2,60 | 11,0 | 7,50 | 12,55 | 7,40 | 0,60±0,025 | g.Ag | CuNiSi | . ⑯ | 8,0-10,0 | 2 | . | ⓤ sealed | 1 | 13641164 | 01 | 15MY07 |
| 12,05 | . | 4,25 | 2,15 | 5,0 | 3,00 | 11,0 | 9,50 | 12,55 | 9,30 | 0,60±0,025 | f.SnAg | CuNiSi | . | 16,0 | 2 | . | ⓤ sealed | 1 | 13641162 | 01 | 15MY07 |
| 12,05 | . | 4,25 | 2,15 | 5,0 | 3,00 | 11,0 | 9,50 | 12,55 | 9,30 | 0,60±0,025 | f.SnAg | CuNiSi | . | 16,0 | 1 | . | ⓤ sealed | 1 | - - / 15458198 | 01 | 02JN03 |
| 12,05 | . | 4,25 | 2,15 | 5,0 | 3,00 | 11,0 | 9,50 | 12,55 | 9,30 | 0,60±0,025 | f.Sn3 | CuNiSi | . | 16,0 | 1 | . | sealed | 1 | - - / 15458196 | 01 | 02JN03 |
| . | . | . | . | . | . | . | . | . | . | 0,25±0,015 | . | 1.4310 | . | . | . | . | . | 2 | - - - / - - - | - | - |
| 11,30 | . | 5,0 | 2,15 | 5,0 | 2,60 | 11,0 | 7,50 | 12,55 | 7,40 | 0,60±0,025 | f.SnAg | CuNiSi | FL2G 22 | 10,0 | 1 | . | ⓤ sealed | 1 | - - / 15408423 | 01 | 14MY01 |
| 11,30 | . | 5,0 | 2,15 | 5,0 | 2,60 | 11,0 | 7,50 | 12,55 | 7,40 | 0,60±0,025 | f.Sn3 | CuNiSi | FLY | 8.0-10,0 | 1 | . | sealed | 1 | 406 569 / 10730408 | 11 | 11AU99 |
| 11,30 | . | 5,0 | 2,40 | 5,0 | 2,30 | 11,0 | 5,95 | 12,55 | 6,25 | 0,60±0,025 | f.SnAg | CuNiSi | . ⑯ | 4,0-6,0 | 1 | . | ⓤ sealed | 1 | 15482568 | 01 | 07JN04 |
| 11,30 | . | 5,0 | 2,40 | 5,0 | 2,30 | 11,0 | 5,95 | 12,55 | 6,25 | 0,60±0,025 | f.Sn3 | CuNiSi | FLRY-B | 4,0-6,0 | 1 | . | sealed | 1 | 401 284 / 15327010 | 11 | 11AU99 |

DELPHI

CONTROLLED DOCUMENTS ARE ONLY AVAILABLE ON THE SERVER

User: LrB-lis
Part: 15344676-CUS01-S01 Date: 18-Sep-18 Time: 17:04
Message: