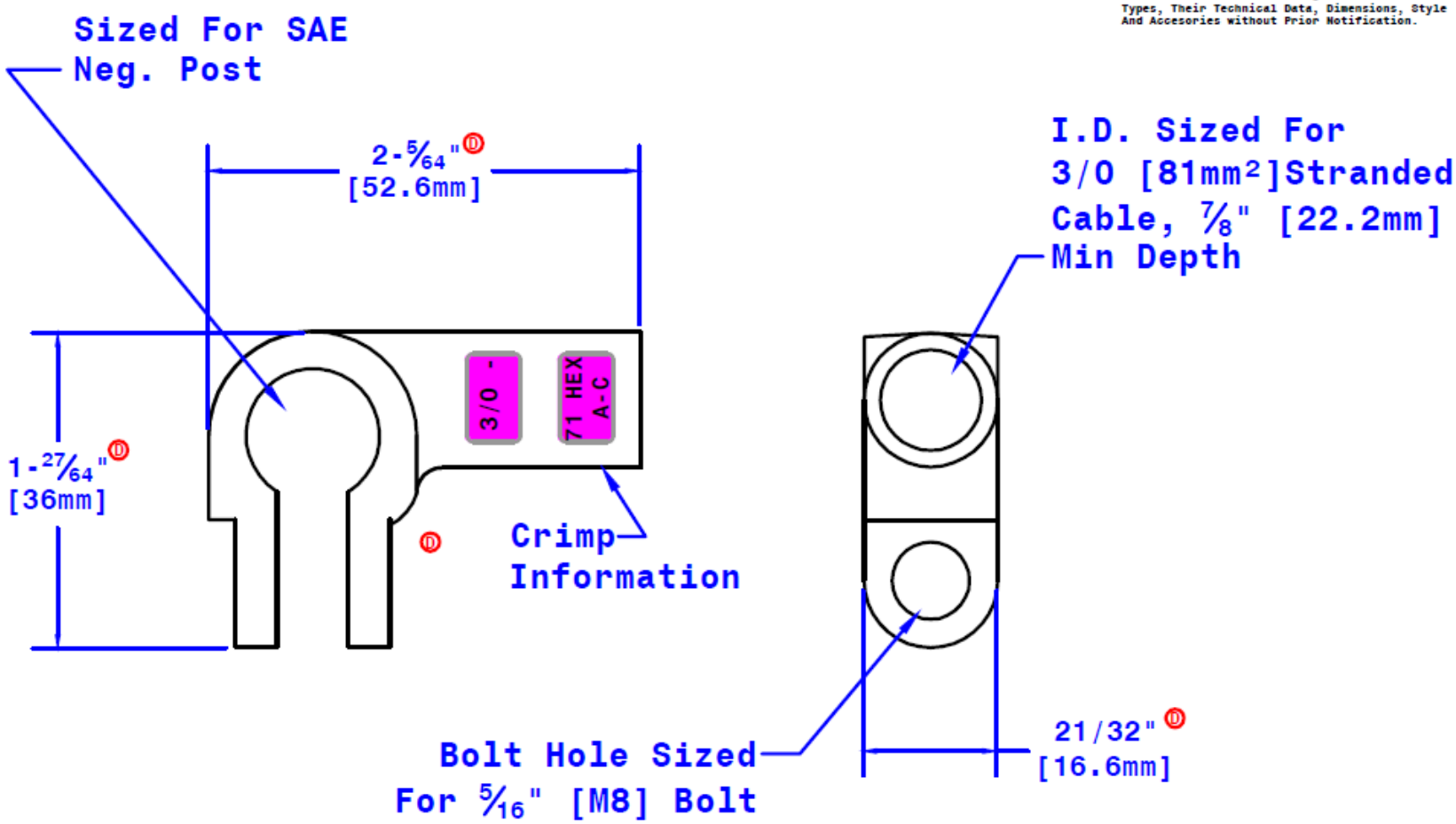Quick Cable Reserves The Right to Alter Product Types, Their Technical Data, Dimensions, Style And Accesories without Prior Notification.