RENNSTEIG TOOLS, INC.

PRODUCT NAME

Rennsteig Crimping Die Set & Locator for APEX 2.8 FEMALE terminals

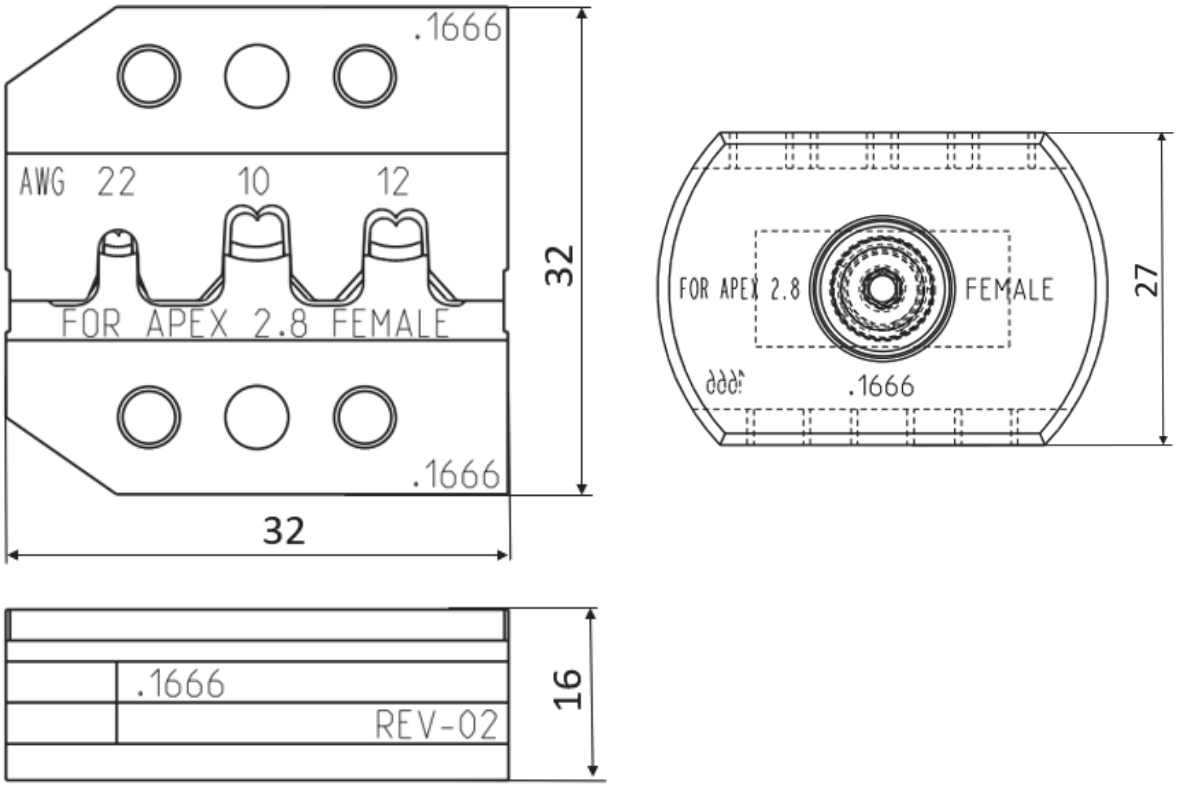

Measurements in Millimeter.

SPECIFICATION

P/N	Description	Application	Terminal P/N	Capacity	Applicable for
624 1666 3 0 RT	Die Set	APEX 2.8 Series	54002200, 54001000	AWG 22 / 10 / 12	Rennsteig Crimp System Tools
624 1666 0 01 RT	Locator	APEX 2.8 Series	54002200, 54001000	AWG 22 / 10 / 12	

REV20190528

RENNSTEIG TOOLS, INC.

CRIMP SPECIFICATION

Core Crimp

Terminal	Wire Size	Crimp height CCH (mm)	Crimp width CCW (mm)	Pull out force (N) DIN EN 60352-2
54002200	AWG 22	1.10 ± 0.05	1.85 ± 0.1	40 *(nominal)*
54001000	AWG 10	2.25 ± 0.05	3.45 ± 0.1	355 *(nominal)*
54001000	AWG 12	1.95 ± 0.05	3.45 ± 0.1	275 *(nominal)*

Insulation Crimp

Terminal	Wire Size	Insulation height ICH (mm)	Insulation width ICW (mm)	
54002200	AWG 22	1.75 ± 0.05	2.60 ± 0.1	
54001000	AWG 10	3.65 ± 0.05	4.20 ± 0.1	
54001000	AWG 12	3.45 ± 0.05	4.20 ± 0.1	

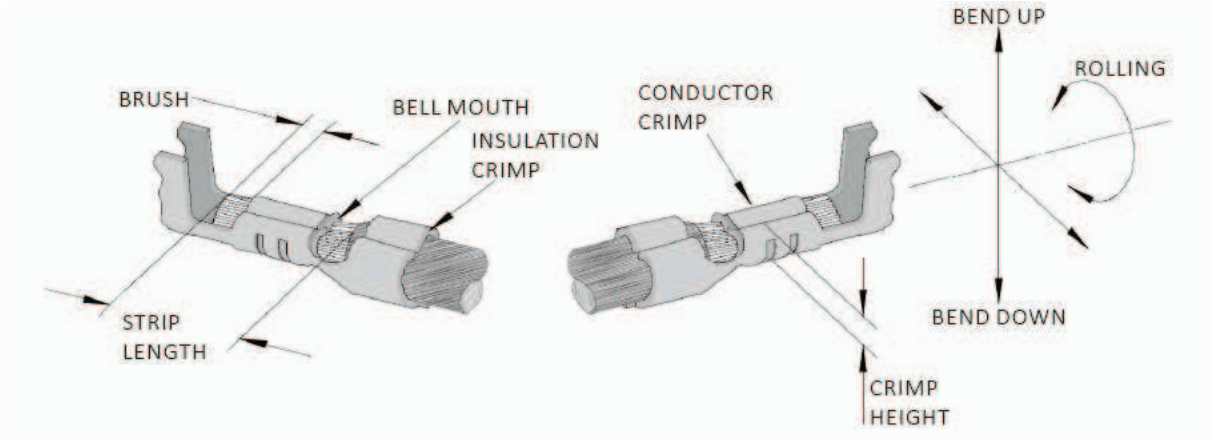

The above terminal drawing is a generic terminal representation. It is not an image of a terminal listed in the scope.

REV20190528