Mini Relays 12 V

0 986 332 402

Replacement for: 0 332 209 158

Change over	Normal close	Normal open
✓		

Mounting bracket	Resistor	Diode	Life durability	Current	Voltage	Number of Pins	Housing type	Temperature range	Degree of protection housing	Degree of protection connection
✓	X	✓	150.000	30 / 20A	12 V	5	Plastic housing	-40… +100°C	IP54	IP20

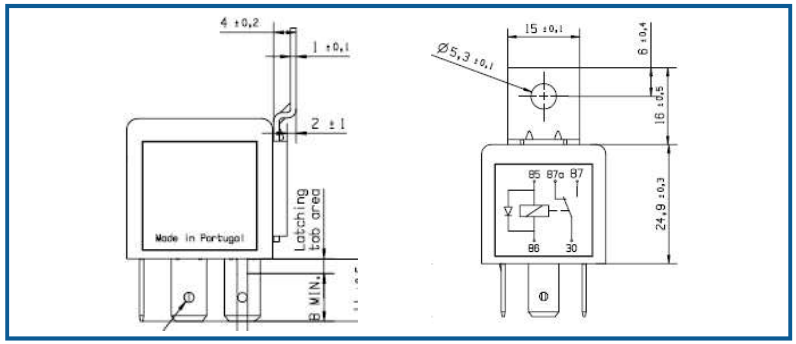

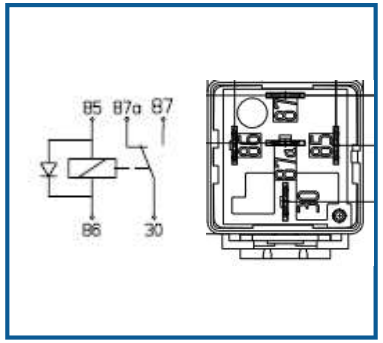

Back to general overview

© Robert Bosch GmbH 2024. All rights reserved, also regarding any disposal, exploitation, reproduction, editing, distribution, as well as in the event of applications for industrial property rights.