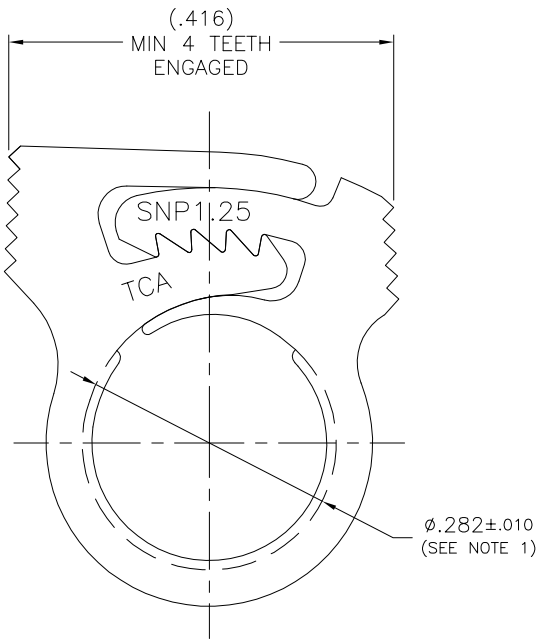

FULL SIZE
AS MOLDED

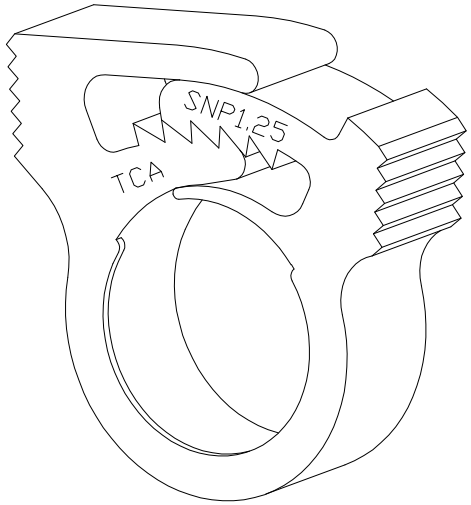

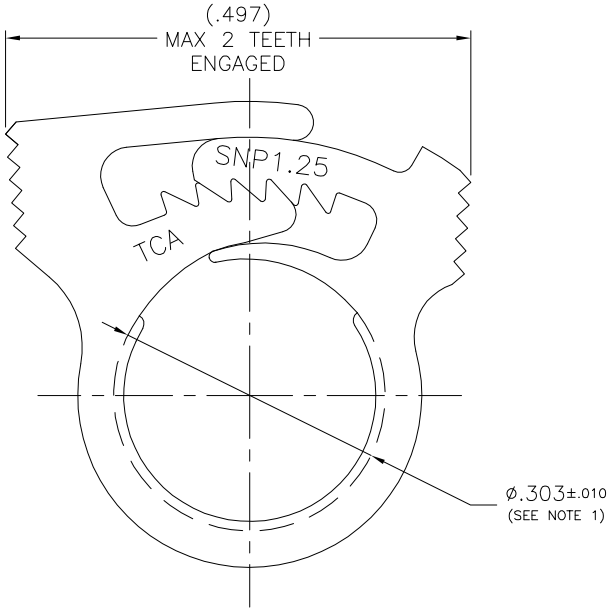

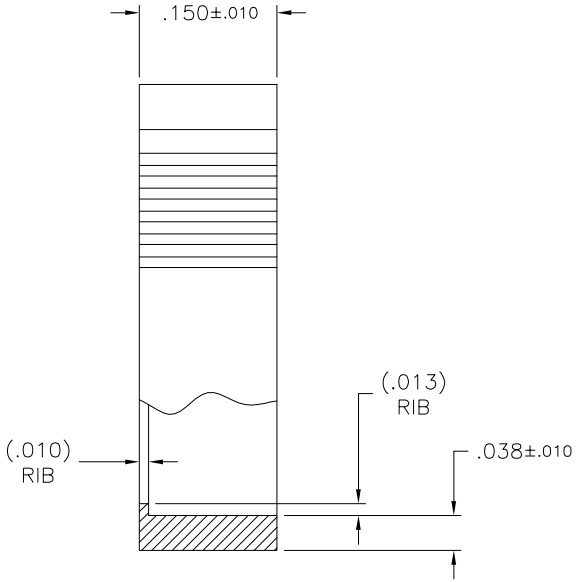

REDUCED
NO SCALE

INVENTORS

HellermannTyton

ALL PROPRIETARY RIGHTS IN THE SUBJECT MATTER SHOWN ON THIS DRAWING ARE EXCLUSIVE PROPERTY OF HELLERMANNTYTON

name	date	city, state

NOTES

1. INSIDE DIAMETERS ARE MEASURED IN THREE PLACES SPACED 120° APART EXCLUDING .010 WIDE RIB
2. 8 TOTAL TEETH, 4 TEETH POSITIONS

REVISION

DRAWING
level 03
date 02/12/2020
by CTF
ECN # 015720
part level –

DIMENSIONS
TOLERANCES
.XXXX=
.XXX= NOTED
.XX=
.X=
∠=
unless otherwise specified
units inches

PART
number SNP1.25GHS_ phase PRODUCTION
name
SNAPPER 1.25
HOSE CLAMP
material 03
PA66GF13 or
PA66HIRHSG15
COLOR: BLACK

DRAWING
FORMAT C version M CAD ACAD scale 10X
computer file number CP2150001CST previous number
drawn K.A.C. 5/4/93 checked K.A.C. 03/16/09 approved GAL 02/12/2020
type CUSTOMER sheet 1 of 1
number CP2125001CST