Brazing : Use .039 Silver Solder
In Secondary Operation

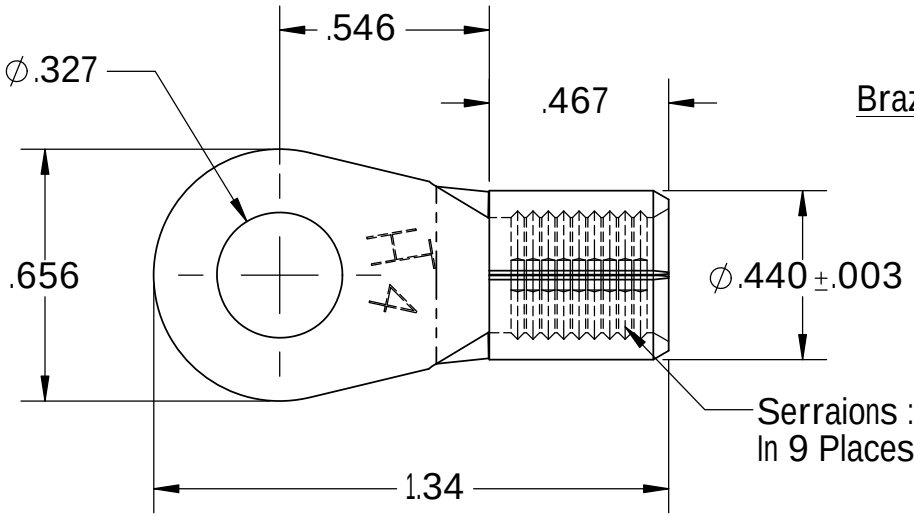

Brazed Seam

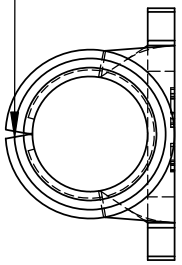

Serraions : .004 Deep
In 9 Places On I.D. Of Barrel

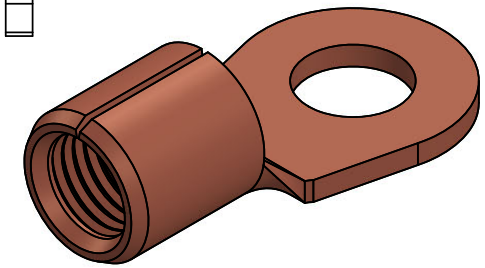

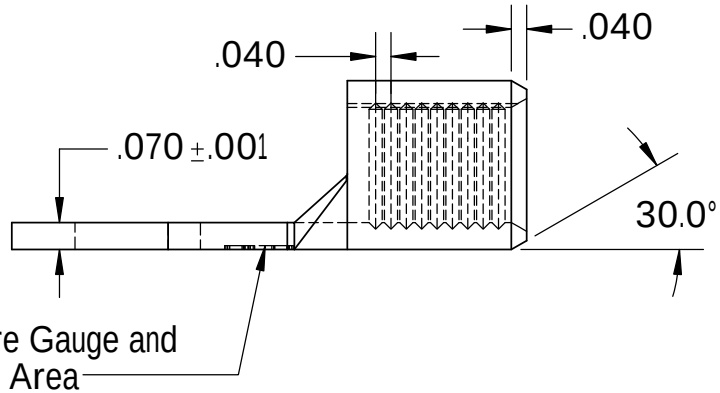

Stamp : Wire Gauge and
Logo In This Area

Actual Size

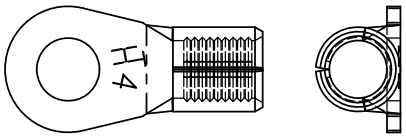

Brazed Seam : 2% Silver 6.5% Phosphorus
91.5% Copper Approx. Melt Temp 750-815 C

Finish - Flash Tin Plate ASTM Spec B545 MIll
Spec : Mil-T10727C Type I .0001 - .00025
Thick

NOTE:
1)DO NOT SCALE
2)BREAK ALL NON CUTTING EDGES
3)

DIE NUMBER	SIZE		NAME	DATE
46	A	DRAWN	Steve W.	9/9/19
	REV	PRINTED	steve	3/1/2024
SCALE: 2:1	R0	UNLESS OTHERWISE SPECIFIED:		

PROPRIETARY AND CONFIDENTIAL
THE INFORMATION CONTAINED IN THIS DRAWING IS THE SOLE PROPERTY OF HILLSDALE TERMINAL. ANY REPRODUCTION IN PART OR AS A WHOLE WITHOUT THE WRITTEN PERMISSION OF HILLSDALE TERMINAL IS PROHIBITED.

DIMENSIONS ARE IN INCHES
TOLERANCES:
FRACTIONAL ±1/32
ANGULAR: ±0°30'
.X ±.030
.XX ±.020
.XXX ±.010

MATERIAL
Material Copper - ETP Alloy 110 - 1/2 Hard Temper - ASTM Spec B152

HILLSDALE TERMINAL
250 Industrial Drive
2222 W. Moore Rd.
Hillsdale, MI 49242

TITLE:
Uninsulated Brazed Seam
5/16" Stud 4 Gauge Ring

DET #:
10621

E:\HTT\Dies\Die 46 - 4 Gauge Rings\Part Prints\