REVISIONS					
REV	ECO	DESCRIPTION	DATE	BY	APPR
A3	-	RELEASE NEW DWG FORMAT	10/21/13	DRP	-
A4	-	REVISED PLATING INFO	16/JUN/16	JAH	-
A5	C1070S	UPDATE DRAWING	28/JUN/19	JOE	TOMMY
B1	C1298S	UPDATE PLATING	14/SEP/20	SULLEN	TOMMY
B2	-	14-18AWG WAS 14-16AWG	21AUG23	JHEAD	DH
B3	-	ADDED NOTE 9	26MAR26	CHRIS	DH
B4	-	CHANGED NOTE 6 FROM 4000 TO 3200	07JUL26	CHRIS	-

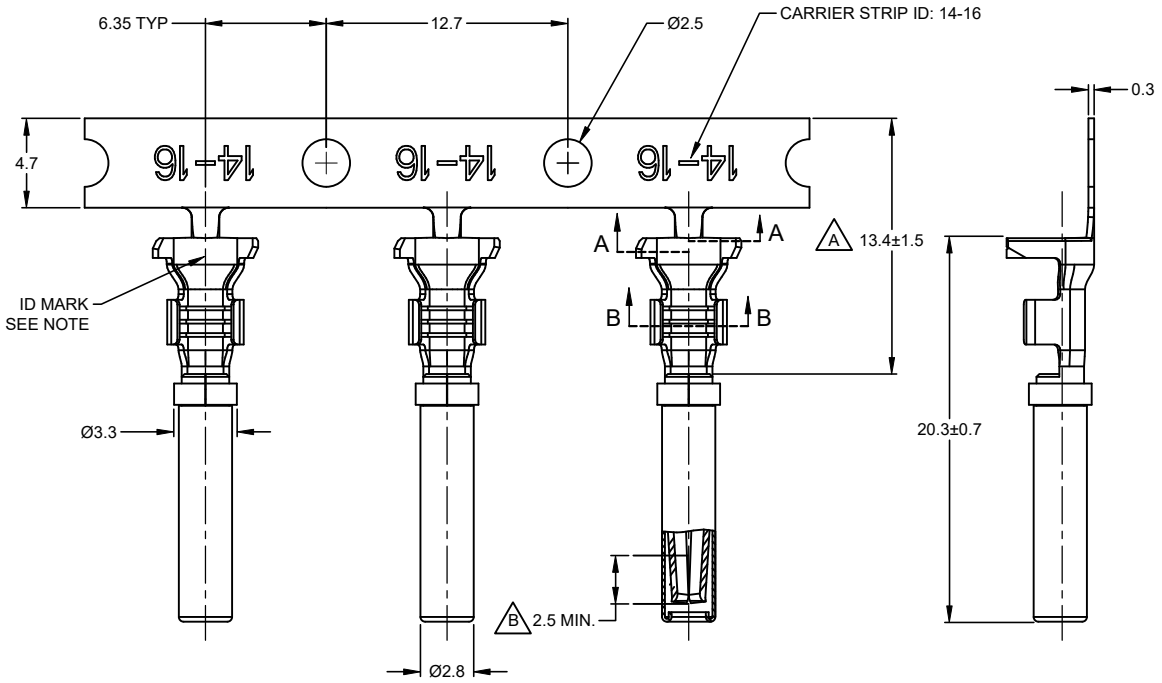

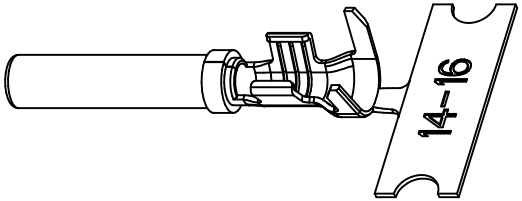

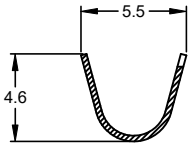

SECTION A-A

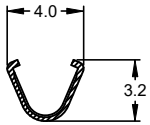

SECTION B-B

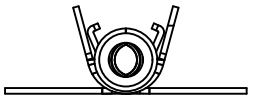

NOTES: UNLESS OTHERWISE SPECIFIED

1. MATERIAL: COPPER ALLOY

2. PLATING: SEE PART NUMBER CHART

3. CONTACT SIZE: 16

4. SPECIFICATIONS:
   4.1 CURRENT RATING: 13 AMPS
   4.2 CONTACT MILLIVOLT DROP: 100 MILLIVOLT
   DROP @ 13 AMP TEST CURRENT.
   4.3 RoHS COMPLIANT

5. RECOMMENDED WIRE RANGE: 14 - 18 AWG (2.0 - 0.75mm²)
   RECOMMENDED INSUL O.D: 2.40 - 3.81MM (0.094 - 0.15INCH)

6. PACKAGE: 3200 PCS/REEL

7. AVAILABLE APPLICATORS: MFX-3975-K OR MFX-3975-G

8. ALL DIMENSIONS ARE FOR REFERENCE USE ONLY

9. ID MARK PRESENT OR NOT DETERMINES MANUFACTURER SITE

PART NUMBER CHART		
PLATING	PART NUMBER	PLATING DESCRIPTION
NICKEL	AT62-14-0122	SELECTIVE TIN OVER NICKEL OVERALL IN A ZONE
GOLD	AT62-14-0144	SELECTIVE GOLD FLASH OVER NICKEL OVERALL IN B ZONE OR ENTIRE CONTACT
TIN	AT62-14-0177	TIN OVER NICKEL OVERALL

SEE PART NUMBER CHART	REF: 1062-14-0122, 1062-14-0144	
PART NUMBER	DESCRIPTION	ITEM
QUANTITY	MATERIALS LIST	

UNLESS OTHERWISE SPECIFIED
1) All dimensions are in metric(mm).
2) Tolerances are as follows:
1 PL DEC ±0.30 | Fractions ±1/64
2 PL DEC ±0.15 | Angles ±1°
3 PL DEC ±0.08
3) Note reference = X

MATERIAL SPECIFICATIONS:

PROCESS SPECIFICATIONS:

NEXT ASS'Y:

SIGNATURES		DATE
DRAWN:	SULLEN ZHANG	14/SEP/20
CHECKED:	ORION LI	15/SEP/20
ENGINEER:		
APPROVAL:	TOMMY XIE	16/SEP/20
CUSTOMER:		

THIS DRAWING IS SUPPLIED FOR INFORMATION ONLY. DESIGN FEATURES, SPECIFICATIONS AND PERFORMANCE DATA SHOWN HEREON ARE THE PROPERTY OF THE AMPHENOL CORPORATION. NO RIGHTS OF REPRODUCTION ARE IMPLIED. ALL DIMENSIONS ARE SUBJECT TO NORMAL MANUFACTURING VARIATIONS.

Amphenol

Sine Systems - www.amphenol-sine.com
44724 Morley Drive
Clinton Township, MI 48036

CONTACT, SOCKET, STAMPED,
SIZE 16, 14-18 AWG, A SERIES

SIZE	TYPE	DWG NO:	REVISION
B	C-	AT62-14-01XX	B4

SCALE: NONE SHEET 1 OF 1

TITLE: SOCKET, STAMPED, SIZE 16, 14-18 AWG, A SERIES
DWG NO: AT62-14-01XX
REV: B4
SH: 1
OF: 1