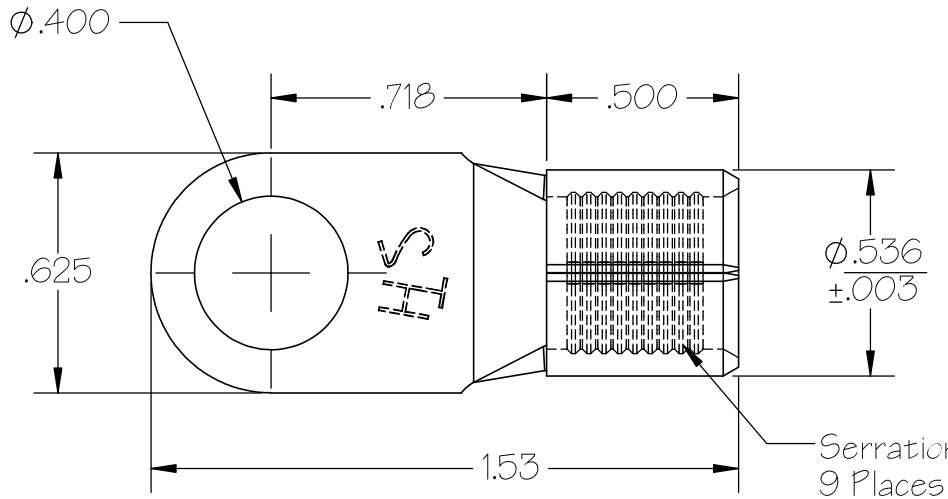

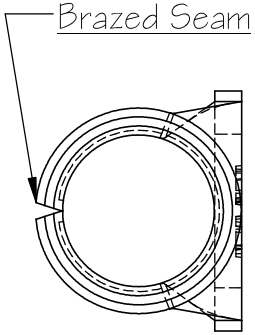

Brazing : Use .039 Silver Solder
In Secondary Operation

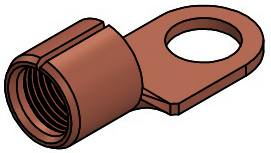

Scale 1 : 1

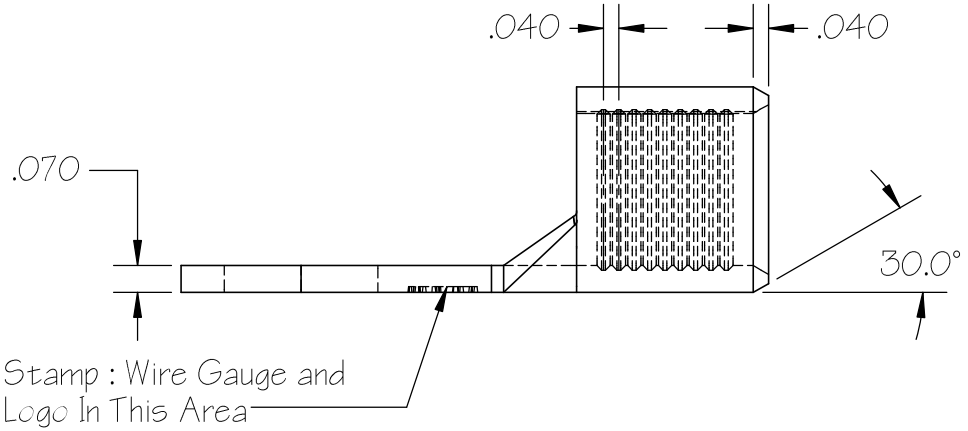

Actual Size

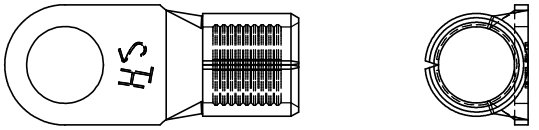

Brazed Seam : 2% Silver 6.5% Phosphorus
91.5% Copper Approx. Melt Temp 750-815 C

Finish - Flash Electro Tin Plate ASTM Spec
B545 MIII Spec : Mil-T10727C Type I .0002 -
.0004 Thick

NOTE:
1)DO NOT SCALE
2)BREAK ALL NON CUTTING EDGES
3)

DIE NUMBER **40**	SIZE **A**		NAME	DATE
		DRAWN	Steve W.	10/24/2022
SCALE 2 : 1	REV R0	PRINTED	steve	2/18/2026
		UNLESS OTHERWISE SPECIFIED:		

PROPRIETARY AND CONFIDENTIAL
THE INFORMATION CONTAINED IN THIS DRAWING IS THE SOLE PROPERTY OF HILLSDALE TERMINAL. ANY REPRODUCTION IN PART OR AS A WHOLE WITHOUT THE WRITTEN PERMISSION OF HILLSDALE TERMINAL IS PROHIBITED.

DIMENSIONS ARE IN INCHES
TOLERANCES:
FRACTIONAL ±1/32
ANGULAR: ±0°30'
.X ±.030
.XX ±.020
.XXX ±.010

MATERIAL
Material Copper - ETP Alloy 110 - 1/2
Hard Temper - ASTM Spec B152

HILLSDALE TERMINAL
266 Industrial Drive
Hillsdale, MI 49242

TITLE:
Uninsulated Brazed Seam 2
Gauge 3/8" Stud Ring

DET #:
10630

E:\HTT\Dies\Die 40 - 2 Gauge Rings\Part Prints\