JOSEPH POLLAK CORP. BOSTON, MASS. 02122 U.S.A.

NO. 11-851

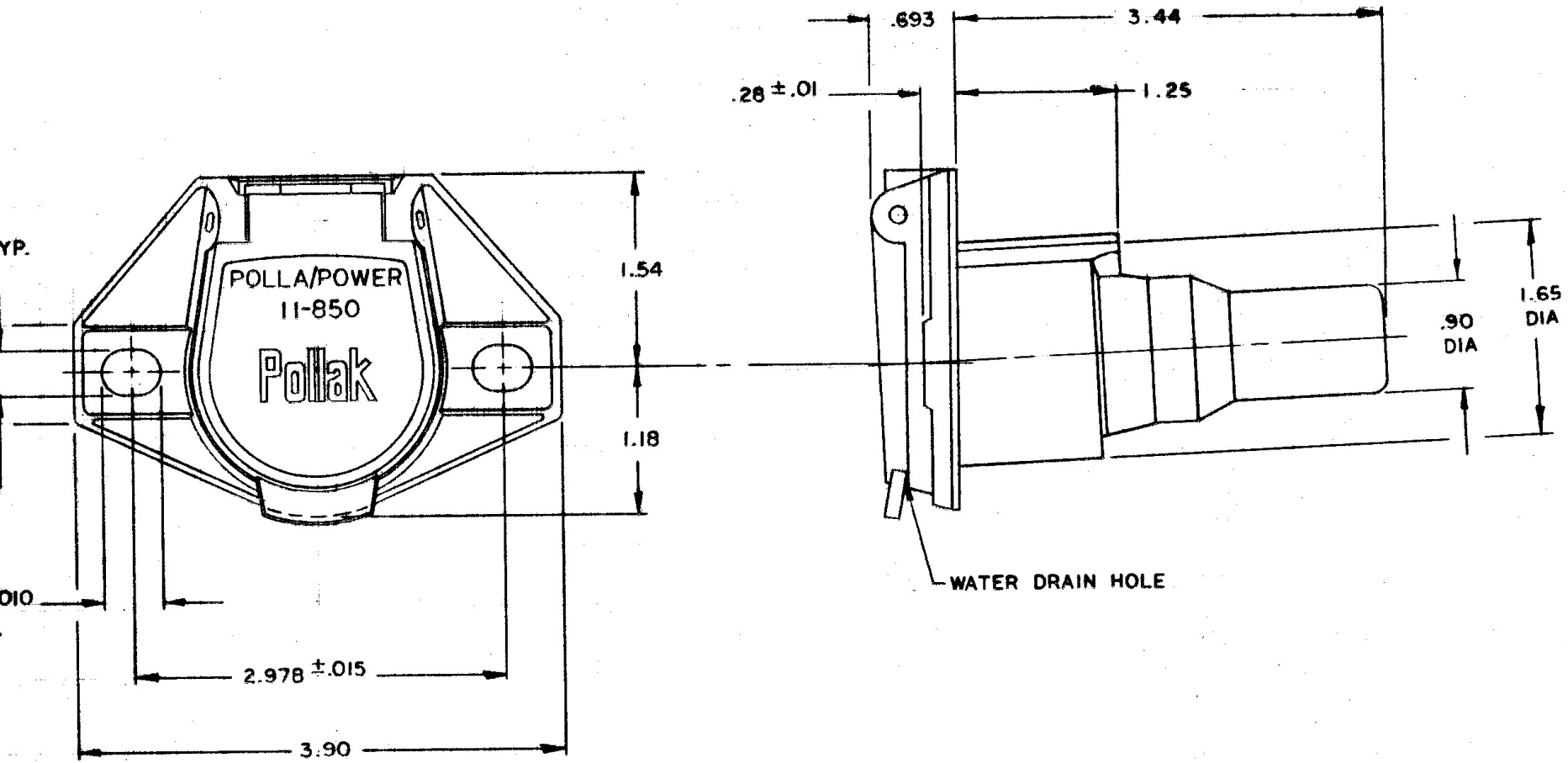

FOR NOTES SEE "A" SIZ

BY SPC DRAWN BY R.F.D. CHECKED BY BW.				APPROVED BY		SCALE 1:1	2 PL. DEC. ±.020	3 PL. DEC. ±.010	ANGLES ±	DATE
SIONS – AUTHORIZED BY – CHANGED BY – DATE				ECN	REVISIONS – AUTHORIZED BY – CHANGED BY – DATE				MATERIAL ZINC DIE CAST	TITLE
TO PROD.	SPC	RD	8/17/87							SINGLE PIN S
SHT. 2	RB	BW	4/8/88						FINISH CHROMATE DIP GOLDEN COLOR	
										NO. 11-851

O. 112