Num	Date	By	Revision Note

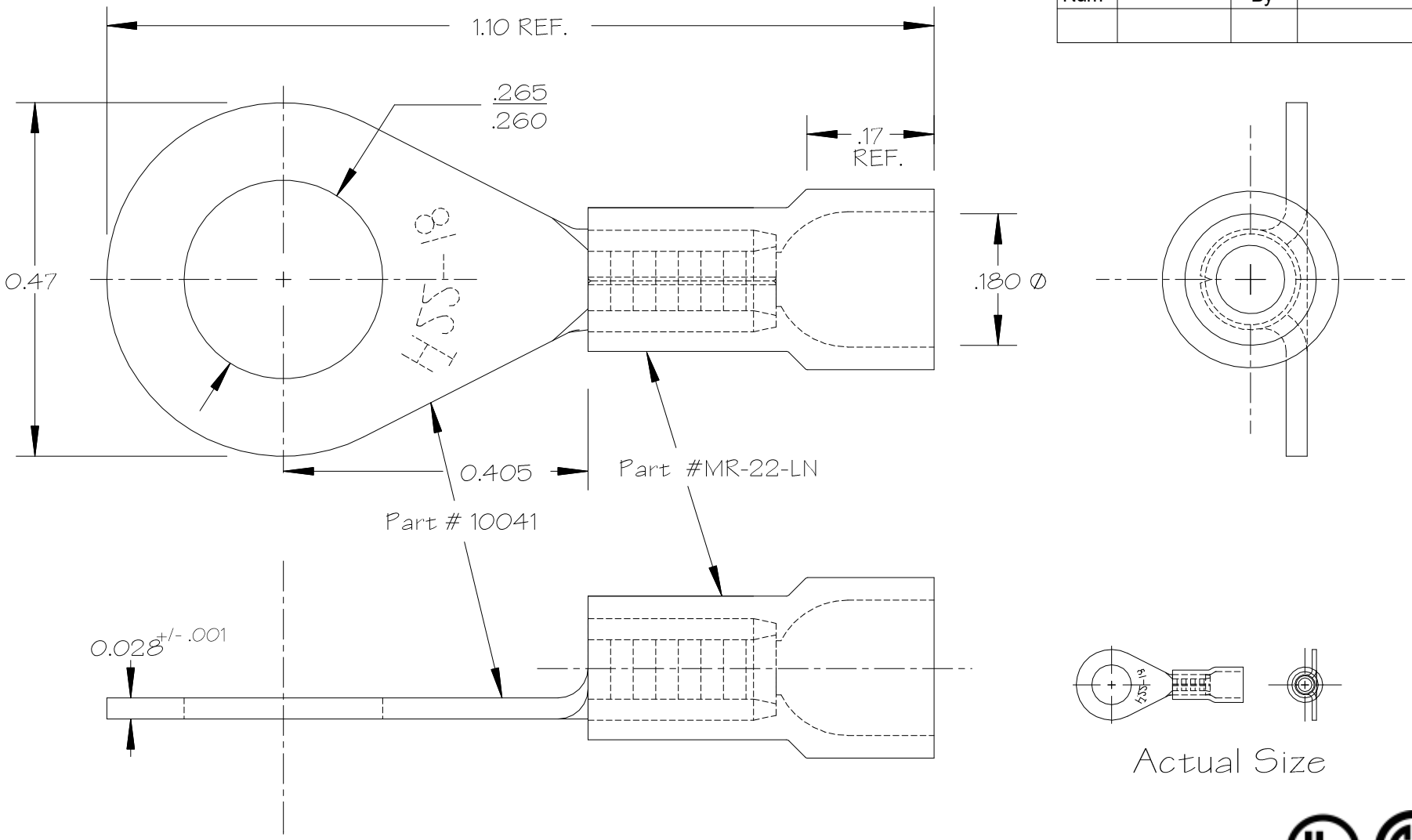

Actual Size

Terminal Notes:

1. Material: ETP Alloy 110 Copper 1/2 Hard Temper
   ASTM Spec B152
2. Heat Treat: Anneal to Soft Temper
3. Finish: Flash Electro Tin Plate ASTM Spec B545
   Mil Spec: Mil-T-10727C Type I .0001-.00025 Thick

Insulator Notes:

1. Material: Nylon Type 6
2. Color: Red

NOTES

1. DO NOT SCALE PRINT.
2. BREAK ALL NON-CUTTING EDGES.
3. STAMP OR ETCH HTT,
   DET NO., MAT'L, & HEAT TREAT
4. GRIND AS SHOWN.

TOLERANCES UNLESS OTHERWISE SPECIFIED .XXX +/- .010 .XX +/- .020 .X +/- .030 FRACTIONS +/- 1/32 ANGLES +/- 0°30'	Hillsdale Terminal 266 Industrial Drive Hillsdale, Michigan 49242	
	Title: Molded Nylon Insulated 22-18 1/4" Stud Ring	
	DRAWN BY: J. Condon	DATE: 10/13/96
DIE NUMBER: D-2	CHECKED BY:	SCALE: 5X
SHEET SIZE: A	MATERIAL: See Notes	CAD DRAWING #: 50041N