UNCONTROLLED DOCUMENT DATE PLOTTED 2/21/2024

SOLIDWORKS CAD DRAWING - DO NOT MODIFY HARDCOPY

PART NO.	ALT.
63-142	

ALT.	DESCRIPTION	ECR	ECN	BY	DATE	APP

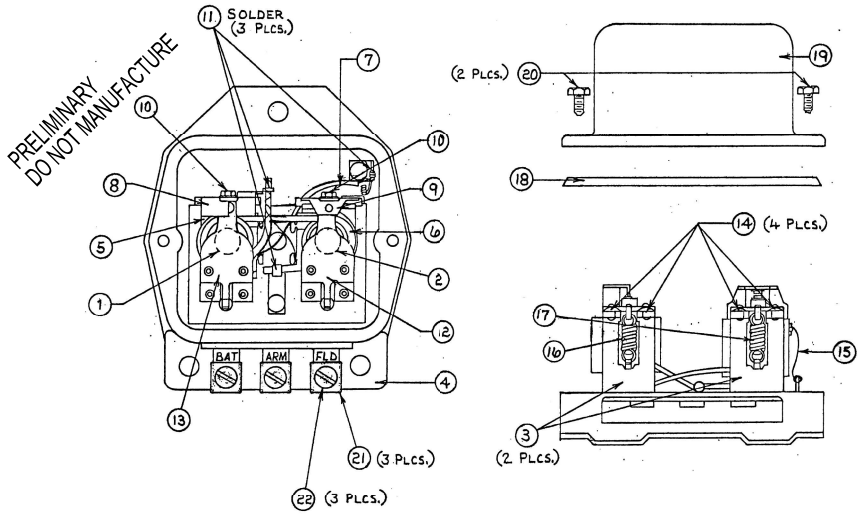

NOTES

1. THE U-MAGNETS ARE TO BE CHECKED WITH A TORQUE DRIVER AND SHALL WITHSTAND A MINIMUM OF 18 INCH LBS. AND A MAXIMUM OF 32 INCH LBS. TORQUE BEFORE TURNING. THE CORES SHALL NOT BE COLLAPSED MORE THAN .005 AS A RESULT OF STAKING.
2. CONNECTIONS TO BE SOLDERED WITH SUFFICIENT HEAT TO REMOVE INSULATION AND PROVIDE A SOLDER CONNECTION THAT WILL MEET STANDARD QUALITY SOLDER SPECIFICATIONS.
3. ARMATURES SHOULD NOT MOVE FROM SIDE TO SIDE WITH 7 LBS. PULL APPLIED.
4. TIGHTEN SCREWS TO 12-17 INCH LBS. TORQUE.
5. 8-12 INCH LBS. TORQUE.

BILL OF MATERIAL

SEQ. NO.	ITEM NO.	PART NO.	QTY.	DESCRIPTION	SPECIAL TOOLING	PROCESS SPECS DWG.NO.	PROCESS SPECS NOTES
	1	922021	1	COIL ASSEMBLY (C.O.)			
	2	924011	1	COIL ASSEMBLY (V.R.)			
	3	922101	2	U - MAGNET			
	4	924140	1	BASE ASSEMBLY			
	—	—	—	ASM. AND STAKE COIL & U - MAGNET TO BASE.			1
	5	822076	1	FIBER WASHER			
	6	824025	1	CURRENT COIL ASSEMBLY			
	7	810041-008	1	TUBING			
	—	—	—	ASM. WASHER, COIL, TUBING ONTO WIRE,		400414	
				HOOK UP WIRE			
	8	924095	1	PT. MOUNT ASS'Y. (C.O.)			
	9	924069	1	PT. MOUNT ASS'Y. (V.R.)			
	10	100107	2	SCREWS			
	—	—	—	ASM. PT. MOUNTS & CRIMP COIL.		400414	
	11	500181	AR	SOLDER			
				CRIMP, BEND & SOLDER		400414	2
				CRIMP, BEND & SOLDER		400414	2
	12	922043	1	ARMATURE (V.R.)			
	13	922059	1	ARMATURE (C.O.)			
	14	100001-056	4	RIVETS			
	15	817081	1	WIRE WRAP LEAD			
	—	—	—	RIVET ARMATURES AND ASM. WIREWRAP		400414	3
	16	710006	1	SPRING			
	—	—	—	POINT SET & SPRING (C.O.)		400107	4
	17	710006	1	SPRING			
	—	—	—	POINT SET & SPRING - (V.R)		400107	4
				ELECTRICALLY SET REGULATOR		400114	
	18	724002	1	GASKET			
	19	924019	1	COVER			
	20	100670-003	2	SCREWS			
				ASSEMBLE GASKET, COVER			5
	21	100923	3	FOLDED WASHER			
	22	100671-005	3	SCREW			
				ASSEMBLE AND SECURE WASHERS TO TERM.			
				& BASE STAMP.			
010	—	—	—	BELTLINE - 11 OPERATIONS.			

QUANTITY REQ'D	ITEM	DWG/PART NO.	NOMENCLATURE	REMARKS
		63-142		

DRAWING PARTS LIST

CIRCLED DIMENSIONS ARE CRITICAL : !	SCALE N.T.S.	APPLICABLE SPECS.	NEXT ASSEMBLY	FINAL APPLICATION
MAT'L:	UNLESS OTHERWISE SPECIFIED DIMENSIONS ARE IN MILLIMETERS DIMS. IN PARENTHESIS ARE (INCHES) TOLERANCES ARE:	STANDARD MOTOR PRODUCTS INC. LONG ISLAND CITY, N.Y. 11101		
STOCK:				
FINISH:				
OEM:	DEC: .05 +/- 0.01	DRN. TI	DRAWING NO.	ALT.
		CHK.	63-142	
	REMOVE ALL BURRS & SHARP CORNERS.	ENG. TI		
		APP.		